PT-200 Series Low Profile Cast Iron Pump Trap

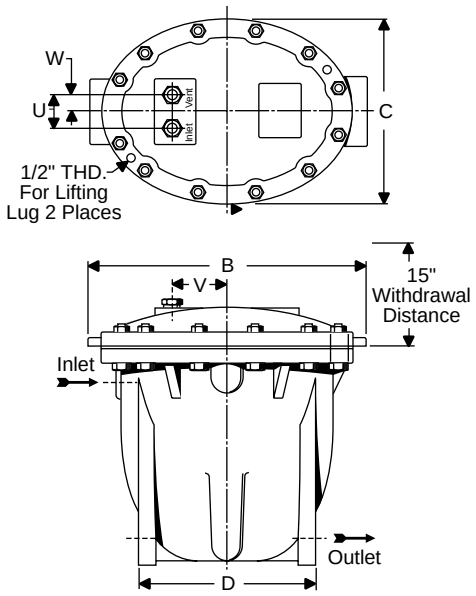

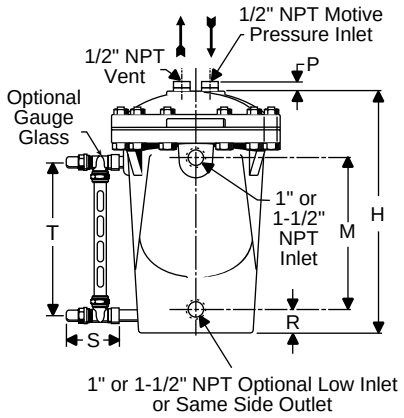



The Armstrong PT-200 Series Low Profile Pump Trap is a low maintenance, non-electric solution to move condensate or other liquids from low points, low pressures or vacuum spaces to an area of higher elevation or pressure. Condensate can be returned well above the 210°F (99°C) limit of conventional electric condensate pumps without the headaches of leaking seals or cavitation problems.

Features

- Non-electric—Uses inexpensive steam, air or gas to operate the pump trap
- Low profile—For tight space requirements
- Explosion proof—Intrinsically safe
- Durable cast iron body for long service life
- Low maintenance—No leaking seals, impeller or motor problems
- All stainless steel internals with durable Inconel X-750 springs
- Externally removable/replaceable seats—Valve and seats can be replaced or cleaned without removing pump cap from body

For a fully detailed certified drawing, refer to CDF #1000.

PT-200 Pumping Trap Physical Data

	PT-204 PT-206	
	in	**mm**
"B"	20-7/16	519
"C"	13-1/2	342
"D"	12-15/16	328
"H"	19	482
"M"	11-35/64	293
"P"	23/32	18
"R"	2-1/32	51
"S"	4-3/8	111
"T"	12	305
"U"	2-1/4	57
"V"	4-1/8	104
"W"	1-1/8	28
Weight lb (kg)	210 (96)	
Number of Body/Cap Bolts	12	
Check Valve Conn. in (mm)	**1 (25)**	**1-1/2 (40)**
Bronze Check Valves lb (kg)	4 (2)	9 (4)
Stainless Steel Check Valves lb (kg)	4 (2)	9 (4)

Maximum Allowable Pressure (Vessel Design) 150 psig @ 450°F (10 bar @ 232°C)
Maximum Operating Pressure 125 psig (9 bar)

All dimensions and weights are approximate. Use certified print for exact dimensions. Design and materials are subject to change without notice.

Armstrong Steam and Condensate Group, 221 Armstrong Blvd., P.O. Box 408, Three Rivers, MI 49093 – USA Phone: (269) 279-3601 Fax: (269) 279-3150
www.armstrong-intl.com
Next

PT-200 Series Low Profile Cast Iron Pump Trap

PT-200 Pumping Trap Materials	
Name of Part	**Series PT-200**
Body and Cap	Cast iron ASTM A48 Cl. 30
Cap Gasket	Compressed non-asbestos
Bolts	SA-449 Steel
Nuts	Alloy steel ASTM A194 Gr. 2H
Inlet Valve Assembly	Stainless steel
Vent Valve Assembly	Stainless steel
Valve Assembly Washers	Zinc plated steel
Plug	Steel
Mechanism Assembly	Stainless steel
Springs	Inconel X-750

PT-200 Pumping Trap Connection Sizes				
Model	**Cast Iron**			
	PT-204		**PT-206**	
	in	**mm**	**in**	**mm**
Inlet Connection	1	25	1-1/2	40
Outlet Connection	1	25	1-1/2	40
Optional Low Inlet or Same Side Outlet Connection	1	25	1-1/2	40
Motive Pressure Connection	1/2	15	1/2	15
Vent Connection	1/2	15	1/2	15
Optional Gauge Glass Connection	1/2	15	1/2	15

PT-200 Pumping Trap Capacities

Motive Pressure		Total Lift or Back Pressure		PT-204 (6" Fill Head) 1" x 1"				PT-206 (6" Fill Head) 1-1/2" x 1-1/2"			
				Steam Motive		Air Motive		Steam Motive		Air Motive	
psig	**bar**	**psig**	**bar**	**lb/hr**	**kg/hr**	**lb/hr**	**kg/hr**	**lb/hr**	**kg/hr**	**lb/hr**	**kg/hr**
15	1.0	5	0.34	1,800	816	2,100	953	2,700	1,225	3,000	1,361
25	1.7			2,025	919	2,300	1,043	3,200	1,451	3,500	1,588
50	3.5			2,100	953	2,500	1,134	3,400	1,542	3,600	1,633
75	5			2,200	998	2,700	1,225	3,500	1,588	3,700	1,678
100	7			2,300	1,043	*	*	3,600	1,633	*	*
125	8.5			2,400	1,089	*	*	3,700	1,678	*	*
25	1.7	15	1	1,500	680	2,000	907	2,400	1,088	2,700	1,225
50	3.5			2,000	907	2,250	1,021	3,200	1,451	3,400	1,542
75	5			2,100	953	2,500	1,134	3,300	1,497	3,500	1,588
100	7			2,110	957	*	*	3,350	1,520	*	*
125	8.5			2,125	964	*	*	3,400	1,542	*	*
35	2.5	25	1.5	1,500	680	1,700	771	2,100	953	2,300	1,043
50	3.5			1,700	771	2,000	907	2,400	1,089	2,600	1,179
75	5			1,900	862	2,300	1,043	2,700	1,225	2,900	1,315
100	7			2,000	907	*	*	2,800	1,270	*	*
125	8.5			2,100	953	*	*	2,900	1,315	*	*
50	3.5	40	3	1,400	635	1,700	771	1,500	680	2,000	907
60	4			1,500	680	2,000	907	2,000	907	2,300	1,043
75	5			1,700	771	2,200	998	2,300	1,043	2,500	1,134
100	7			1,800	816	*	*	2,400	1,089	*	*
125	8.5			1,920	871	*	*	2,500	1,134	*	*
70	4.5	60	4	1,100	499	2,000	907	1,150	522	2,000	907
75	5			1,300	590	2,300	1,043	1,325	601	2,300	1,043
100	7			1,600	726	*	*	1,900	862	*	*
125	8.5			1,720	780	*	*	2,000	907	*	*

NOTES: Published capacities are based on the use of external check valves supplied by Armstrong. Fill head measured from drain point to top of pump cap. See figures on page CRE-25. Although motive pressures are shown at high pressure differentials (difference between motive inlet pressure and total lift or back pressure), it is preferable to use a motive pressure of 10 - 15 psig (0.65 - 1.0 bar) above discharge (outlet) pressure. This ensures longevity of economical (brass) check valves and reduces both venting time and temperature differential (on steam). If a higher differential is used, stainless steel check valves are recommended.
*Consult factory.

PT-200 Capacity Conversion Factors for Other Fill Heads

Fill Head		in	mm	in	mm	in	mm	in	mm	in	mm
		0	**0**	**6**	**152**	**12**	**305**	**24**	**610**	**36**	**914**
Model	**PT-204**	0.7		1		1.1		1.3		1.4	
	PT-206	0.7		1		1.1		1.3		1.4	

NOTE: Fill head is measured from drain point to top of cap. See figures on page CRE-25. Discharge per cycle is typically 3.5 gallons for PT-200 Series.

Armstrong Steam and Condensate Group, 221 Armstrong Blvd., P.O. Box 408, Three Rivers, MI 49093 – USA Phone: (269) 279-3601 Fax: (269) 279-3150
www.armstrong-intl.com